VEKTORSKA ANALIZA

89. -114.

II. dio

Zadatak 89.) Izračunajte krivuljni integral vekt. polja

$$\vec{v}(x,y,z) = e^{3xz^3}\left(3yz^3 i + j + 9xyz^2 k\right)$$ duž proizvoljno

odabrane krivulje od točke $A(2,2,-1)$ do točke $B(2,-1,2)$.

↳ zaključiti da je polje potencijalno ($\text{rot}\,\vec{v} = \vec{0}$)

$$W = \int_\Gamma \vec{f}\cdot d\vec{r} = \int_\Gamma \vec{f}(\vec{r}(t))\cdot \vec{r}_0'(t)\,dt$$

$$\hookrightarrow d\vec{r} = \vec{r}\,'(t)\,dt = \|\vec{r}\,'(t)\|\,\vec{r}_0(t)\,dt = \vec{r}_0(t)\,dS$$

jedinični tangencijalni vektor na krivulji Γ u nekoj njenoj točki koja je određena parametrom t

↓ Coffvi pomogao:

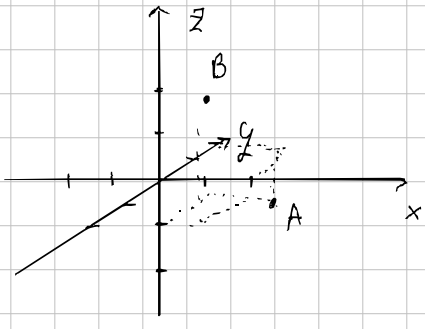

$$\int_A^B \vec{v}\,d\vec{r} = \int_A^C \vec{v}\cdot d\vec{r}_1 + \int_C^B \vec{v}\cdot d\vec{r}_2$$

$$\vec{r}_1 = (\overset{x}{2}, \overset{y}{t}, \overset{z}{-1}) \qquad \vec{r}_2 = (\overset{x}{2}, \overset{y}{-1}, \overset{z}{t})$$

miče se po y od A do C (2 do -1)

(-1 do 2)

↳ $d\vec{r}_1 = (0,1,0)$

$d\vec{r}_2 = (0,0,1)$

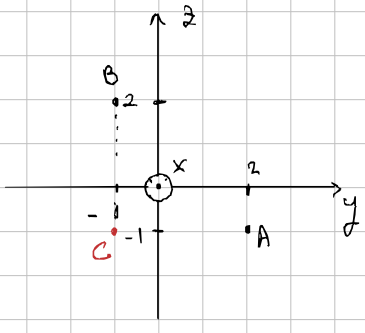

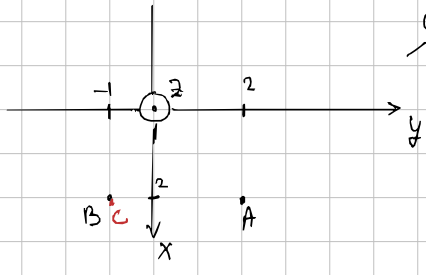

$\vec{r}_1\,(\overset{x}{2}, \overset{y}{t}, \overset{z}{-1}) \Rightarrow$ Zanima nas samo y komponente vektora $\vec{v}$

$\vec{r}_2\,(\overset{x}{2}, \overset{y}{-1}, \overset{z}{t}) \Rightarrow$ —||— z komponente

$$\int_A^B \vec{v}\,d\vec{r} = \left(\int_2^{-1} e^{3xz^3}\right) = \int_2^{-1} e^{3\cdot 2\cdot (t)^3}\,dt = -\int_{-1}^{2} e^{-6}\,dt = -e^{-6}(2+1) = -3e^{-6}$$

$$= \left(\int_{-1}^{2} e^{3xz^3}\cdot 9\cdot x\cdot y\cdot z^2\right) = \int_{-1}^{2} e^{3\cdot 2\cdot t^3}\cdot 9\cdot 2\cdot(-1)\cdot t^2\,dt = -18\int_{-1}^{2} e^{6t^3}\cdot t^2\,dt$$

$$= \left| \begin{array}{l} v = 6t^3 \\ dv = 18t^2\,dt \rightarrow dt = \dfrac{dv}{18t^2} \\ (t \to v) \Rightarrow (2 \to 48) \\ \quad\quad\quad (-1 \to -6) \end{array} \right| = -\cancel{18}\int_{-6}^{48} e^{v}\cdot\frac{dv}{\cancel{18t^2}}\cdot\cancel{t^2} = -\int_{-6}^{48} e^{v}\,dv$$

$$= -e^{48} + e^{-6}$$

$$\int_A^B \vec{v}\,d\vec{r} = -3e^{-6} - e^{48} + e^{-6} = \boxed{-2e^{-6} - e^{48}}$$

Zad 90.) $\vec{v}(x,y,z) = 3e^{-xz^4}\left(-yz^4 i + j - 4xyz^3 k\right)$

$A(-3,1,1)$ $B(3,-3,-2)$

nešto sam fukala u računu

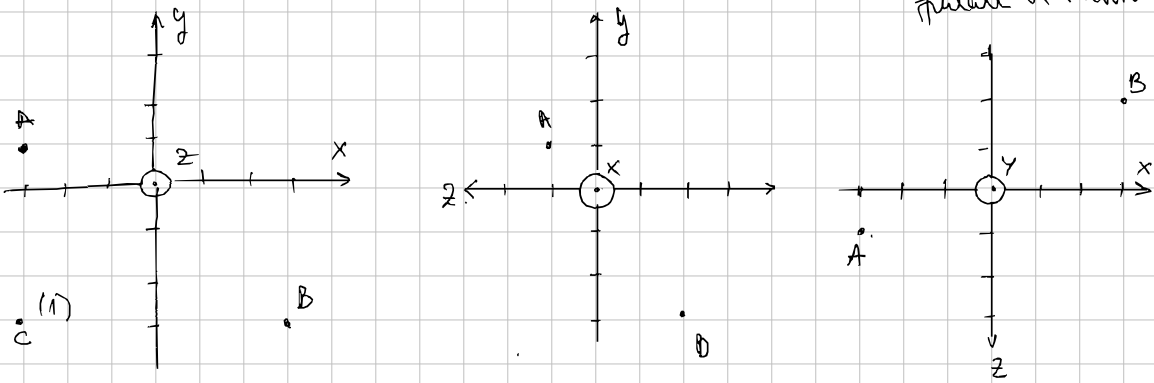

$C(-3,-3,1)$ $A - B = A \to C,\ C \to D,\ D \to B$

$D(3,-3,1)$ $\int_A^B \vec{v}\,d\vec{r} = \int_A^C \vec{v}\,d\vec{r}_1 + \int_C^D \vec{v}\cdot d\vec{r}_2 + \int_D^B \vec{v}\,d\vec{r}_3$

$$\int_A^B \vec{v}\,d\vec{r} = \left(\int_1^{-3} 3e^{-xz^4}\cdot(-y)z^4\right) + \left(\int_{-3}^{3} 3e^{-xz^4}\right) + \left(\int_1^{-2} 3e^{-xz^4}\cdot(-4)xyz^3\right)$$

$\vec{r}_1 = (-3, t, 1)$ $\vec{r}_2 = (t, -3, 1)$ $\vec{r}_3 = (3, -3, t)$

$d\vec{r}_1 = (0,1,0)$ $d\vec{r}_2 = (1,0,0)$ $d\vec{r}_3 = (0,0,1)$

1. $-\int_{-3}^{1} 3\cdot e^{-(-3)\cdot 1}\cdot(-t)\,dt = 3\int_{-3}^{1} e^{3}\cdot t\,dt = \frac{3e^3}{2}\cdot t^2\Big|_{-3}^{1} = \frac{3e^3}{2}\underbrace{(1-9)}_{-8} = -12e^3$

2. $3\int_{-3}^{3} e^{-t}\,dt = -3\left(e^{-3} - e^{3}\right) = 3e^3 - e^{-3}$

3. $-\int_{-2}^{1} \underbrace{3\cdot e^{-3\cdot t^4}\cdot(-4)}_{-12}\cdot 3\cdot(-3)t^3 = -12\cdot 9\int_{-2}^{1} t^3\cdot e^{-3t^4} =$

$v = -3t^4$

$dv = -12t^3\,dt$

$\to dt = \frac{dv}{-12t^3}$

$t \to v$

$(1 \to -3)$

$(-2 \to 48)$

$= \cancel{-12}\cdot 9\int_{-3}^{48} e^{v}\cdot\frac{dv}{\cancel{-12}\,\cancel{t^3}}\,\cancel{t^3} = -9\int_{-3}^{48} e^{v}\,dv$

$= -9\left(e^{48} - e^{-3}\right) = -9e^{48} + 9e^{-3}$

$\underbrace{-12e^3 + 3e^3}\ \underbrace{-e^{-3} + 9e^{-3}} - 9e^{48} = -11e^3 + 8e^{-3} - 9e^{48}$

Zad. 91.) Primjenom Greenovog teorema na integral $\oint_\Gamma f_1(x,y)dy - f_2(x,y)dx$ po zatvorenoj pozitivno orijentiranoj krivulji $\Gamma \ldots 6x^2+3y^2=1$ koja omeđuje područje Ω, dobivamo koji integral?

GREENOV TEOREM $\vec{f}(x,y) = f_1(x,y)\vec{i} + f_2(x,y)\vec{j}$

$$\oint_\Gamma f_1(x,y)\,dx + f_2(x,y)dy = \iint_\Omega \left[\frac{\partial f_2(x,y)}{\partial x} - \frac{\partial f_1(x,y)}{\partial y}\right] dx\,dy$$

$$\oint_\Gamma f_1\,dx = -\iint_\Omega \frac{\partial f_1}{\partial y}\,dx\,dy \qquad \oint_\Gamma f_2\,dy = \iint_\Omega \frac{\partial f_2}{\partial x}\,dx\,dy$$

→ primjenjeno na ovaj zadatak ⇒ $\iint_\Omega \left[\frac{\partial f_2(x,y)}{\partial x} + \frac{\partial f_1(x,y)}{\partial y}\right] dx\,dy$ D ✓

Zad. 92.) Green: $\oint_\Gamma f_1(x,y)dy - f_2(x,y)dx$ po zatvorenoj pozitivno orijentiranoj krivulji $\Gamma \ldots 5x^2+4y^2=1$.

$\longrightarrow \iint_\Omega \left[\frac{\partial f_2(x,y)}{\partial x} + \frac{\partial f_1(x,y)}{\partial y}\right] dx\,dy$ C ✓

Zad. 93.) Neka je $\vec{F}(x,y) = f_1(x,y)i + f_2(x,y)j$ glatko vekt polje def na $\mathbb{R}^2$. Primjenom Greenovog teorema na integral $\oint_\Gamma f_1(x,y)dy - f_2(x,y)dx$ po zatvorenoj pozitivno orijentiranoj krivulji $\Gamma \ldots 7x^2+5y^2=1$ koja omeđuje područje Ω, dobivamo integral.

$f_1 dy - f_2 dx = P dx + Q dy$

$P = -f_2 \qquad Q = f_1$

$$\oint_\Gamma f_1(x,y)\,dx = -\iint_\Omega \frac{\partial f_1}{\partial y}\,dx\,dy$$

unutar integrala $\iint_\Omega \frac{\partial f_1}{\partial y}dx\,dy + \frac{\partial f_2}{\partial x}dx\,dy \Rightarrow \boxed{\frac{\partial f_1}{\partial y} + \frac{\partial f_2}{\partial x} = \operatorname{div} F}$

Zadatak 94.) Vrijednost integrala $\oint_\Gamma \frac{-y}{x^2+y^2}dx + \frac{x}{x^2+y^2}dy$ po pozitivno orijentiranoj krivulji $\Gamma \ldots x^2+y^2=36 \longrightarrow \frac{x^2}{6^2} + \frac{y^2}{6^2} = 1$

$x = 6\cos t$

$y = 6\sin t$

Greenov teorem: $f_1(x,y)dx = \frac{-y}{x^2+y^2}$

$f_2(x,y)\,dy = \frac{x}{x^2+y^2}$ $\quad x,y \neq 0,0$

Green: $\oint_\Gamma (P dx + Q dy) = \iint_\Omega \left(\frac{\partial Q}{\partial x} - \frac{\partial P}{\partial y}\right) dx\,dy$

ALI GREEN NE RADI KADA IMA RUPU!

$\oint \left(\frac{-1}{6}\sin t + \frac{1}{6}\cos t\right) dt$

$dx = -6\sin(t) \qquad dy = 6\cos t \qquad \int_0^{2\pi} \sin^2(t) + \cos^2(t)\,dt = \boxed{2\pi}$

$\overset{?}{\circ}\ \overset{?}{\circ}\ \frac{\pi}{18}\ \overset{?}{\circ}$

* Ako ne drhnaća izvodište integral je $\emptyset$.

! Grenov TM ne vrijedi ako u područiju se sadrži točka koja ne drhnaća!

95. $\oint_\Gamma \frac{-y}{x^2+y^2}\,dx + \frac{x}{x^2+y^2}\,dy$, $\Gamma \ldots x^2+y^2=4$

$x = 2\cos t \longrightarrow dx = -2\sin t$

$y = 2\sin t \longrightarrow dy = 2\cos t$

$$\int_0^{2\pi} \sin^2(t) + \cos^2(t)\,dt = \boxed{1\cdot 2\pi}$$

96. ↯ 97. ↯

98. $\int_\Gamma e^z + 4\sin(7z)\,dz$, $\Gamma \ldots 7x^2+6y^2=5$ $/:5$

$\emptyset$

$$\frac{x^2}{\frac{5}{7}} + \frac{y^2}{\frac{5}{6}} = 1$$

Zad. 99.) Teorem iz vektorske analize:

Neka je Σ zatvorena ploha koja omeđuje tijelo V, te neka je $f(x,y,z) = f_1(x,y,z)\,i + f_2(x,y,z)\,j + f_3(x,y,z)\,k$ glatko vekt. polje definirano na nekom podskupu u $\mathbb{R}^3$ koji sadrži plohu Σ.

— OVO ŠTO NEDOSTAJE —

gdje je

$$\operatorname{div}\vec{f} = \frac{\partial f_1}{\partial x} + \frac{\partial f_2}{\partial y} + \frac{\partial f_3}{\partial z}$$ diverg. vekt polja $\vec{f}$

$$\iint_{\Sigma} \vec{f}\cdot d\vec{S} = \iiint_V \operatorname{div}\vec{f}\, dV$$, 100. zad je isti

MASONE!

Zad. 101.) $\oint_\Gamma e^{y^2}dx + 2xye^{y^2}dy$ po luku Γ koji je dio krivulje $y=\frac{3}{10}\Gamma x$ od točke $A(4,\frac{3}{5})$, $O(0,0)$ iznosi:

ovo nije zatvorena krivulja

da bi primjenili Greena moramo zatvoriti (poslije oduzmemo)

Green: $\oint_\Gamma f_1\,dx + f_2\,dy = \iint_\Omega \left(\frac{\partial f_2}{\partial x} - \frac{\partial f_1}{\partial y}\right)dx\,dy$

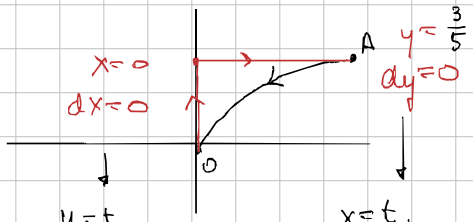

Zatvorimo s pravcima!

$y=t$, $t\in[0,\frac{3}{5}]$

$x=t$, $t\in[0,4]$

ovaj integral = GREENOV $-\int_{\Gamma_1} - \int_{\Gamma_2}$

Green nam daje iznos cijelog opsega znači samo moramo oduzeti pomoćne

$\frac{\partial f_2}{\partial x} = 2ye^{y^2}$ $\quad \frac{\partial f_1}{\partial y} = 2ye^{y^2}$ } oduzmemo pa $\frac{\partial f_2}{\partial x} - \frac{\partial f_1}{\partial y} = \boxed{0}$ Green

---

$\int_{\Gamma_1} \rightarrow \begin{matrix} x=0 \\ dx=0 \end{matrix} \Rightarrow \int_{\Gamma_1} 0 + 0 = \boxed{0}$, $\int_{\Gamma_2} \rightarrow \begin{matrix} y=\frac{3}{5} \\ dy=0 \\ x=t \end{matrix} \Rightarrow \int_{\Gamma} e^{\left(\frac{3}{5}\right)^2}dt = \int_0^1 e^{\frac{9}{25}}dt$

$\hookrightarrow \boxed{4e^{\frac{9}{25}}}$

Green

$I = 0 - 0 - 4e^4$

$\hookrightarrow \boxed{I = -4e^{\frac{9}{25}}}$

Zadatak 102.) $\oint_\Gamma e^{y^2}dx + 2xye^{y^2}dy$ po luku krivulje

$y = \frac{1}{4}\sqrt{x}$ od $A(4, \frac{1}{2})$ do $O(0,0)$

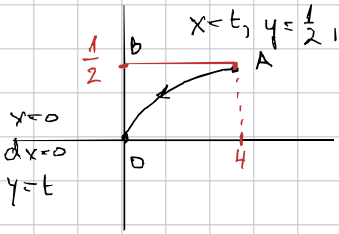

Green $- \int_{\Gamma_1} - \int_{\Gamma_2}$

$\Gamma_1 = \overline{AB}$ $\quad \Gamma_2 = \overline{BO}$

$$\oint_\Gamma f_1 + f_2 = \iint_\Omega \left(\frac{\partial f_2}{\partial x} + \frac{\partial f_1}{\partial y} \right) dx\,dy$$

$$\frac{\partial f_2}{\partial x} = 2ye^{y^2} \qquad \frac{\partial f_1}{\partial y} = 2ye^{y^2} \implies \text{Green} = 0$$

$$\int_{\Gamma_1} = \int_A^B \begin{pmatrix} x=0 \\ dx=0 \\ y=t \end{pmatrix} = \int_A^B \cancel{e^{t^2}\cdot 0} \cancel{+2\cdot 0\cdot ye^{y^2}d} = 0$$

$$\int_B^O \begin{pmatrix} x=t \\ y=\frac{1}{2} \\ dy=0 \end{pmatrix} = \int_B^O e^{\frac{1}{4}}dt = \int_0^4 e^{\frac{1}{4}}dt = 4e^{\frac{1}{4}}dt$$

$$I = 0 - 0 - 4e^{\frac{1}{4}} \longrightarrow \boxed{-4e^{\frac{1}{4}}}$$

Zadatak 103.) $\iint_{\Sigma} x^2\,dy\,dz + y^2\,dx\,dz + z^2\,dx\,dy$ po djelu plohe $\Sigma \ldots x^2+y^2+z^2=\frac{1}{9}$ za $z \geq 0$ i orijentirano na van

$$\frac{x^2}{\frac{1}{9}}+\frac{y^2}{\frac{1}{9}}+\frac{z^2}{\frac{1}{9}}=1$$

PLOŠNI INTEGRAL: $\iint_{\Sigma} dS = \iint_{\Omega} \left\| \frac{\partial \vec{r}}{\partial u} \times \frac{\partial \vec{r}}{\partial v} \right\| du\,dv$

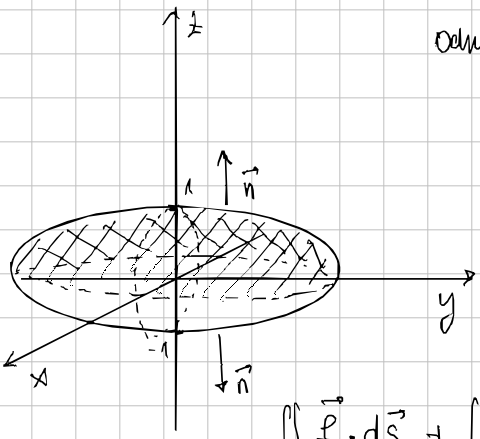

Odnosno: $\iint_{\Sigma} \vec{f}\cdot d\vec{S} = \iiint_{\Sigma} \nabla \vec{F}\cdot dV$

$\operatorname{div}\vec{f} = 2x+2y+2z$

↳ ploha nije zatvorena ODOZDO

↳ ne možemo koristiti TM o diverg.

$$\iint_{\Sigma} \vec{f}\cdot d\vec{S} + \underbrace{\iint_{\Sigma_0} \vec{f}\cdot d\vec{S}}_{\text{ova pomoćna}} = \iint_{\Sigma\cup\Sigma_0} \vec{f}\cdot d\vec{S} = \iiint_V \operatorname{div}\vec{f}\cdot dx\,dy\,dz$$

$x = r\cos\varphi\cdot\sin\vartheta$

$y = r\sin\varphi\cdot\sin\vartheta$

$z = r\cos\vartheta$

$dx\,dy\,dz = r^2\sin\vartheta\cdot dr\cdot d\varphi\cdot d\vartheta$

$$\Rightarrow \underbrace{\iiint_V (2x+2y+2z)\cdot dx\,dy\,dz}_{1} - \iint_{\Sigma} \vec{f}\cdot d\vec{S}$$

$$2\int_0^{2\pi} d\varphi \int_0^{\frac{\pi}{2}} d\vartheta \int_0^a r(\cos\varphi\cdot\sin\vartheta + \sin\varphi\sin\vartheta + \cos\vartheta)\, r^2\sin\vartheta\, dr$$

$$= 2\int_0^{2\pi} d\varphi \int_0^{\frac{\pi}{2}} \sin\vartheta\, d\vartheta \int_0^a r^3(\cos\varphi\cdots)\,dr = 2\int_0^{2\pi} d\varphi \int_0^{\frac{\pi}{2}} \frac{1}{4} r^4 (\ldots)\sin\vartheta \Big|_0^a d\vartheta$$

$$= \frac{a^4}{2}\left(\int_0^{2\pi} d\varphi \int_0^{\frac{\pi}{2}} \sin^2\vartheta\,(\cos\varphi+\sin\varphi) + \sin\vartheta\cdot\cos\vartheta\, d\vartheta\right)$$

$$= \frac{a^4}{2}\left(\underbrace{\int_0^{2\pi} \cos\varphi + \sin\varphi\, d\varphi \int_0^{\frac{\pi}{2}} \sin^2\vartheta\, d\vartheta}_{0} + \int_0^{2\pi} d\varphi \int_0^{\frac{\pi}{2}} \sin\vartheta\cdot\cos\vartheta\, d\vartheta\right)$$

$$= \frac{a^4}{2}\int_0^{2\pi}\int_0^{\frac{\pi}{2}} \underbrace{\frac{1}{2}\cdot\sin 2\vartheta\, d\vartheta}_{1} = \frac{a^4}{4}\left(\int_0^{2\pi} d\varphi\right) = \boxed{\frac{a^4}{2}\pi}$$

$\iint_{\Sigma_0} \vec{f}\cdot d\vec{S} = \iint_{\Sigma_0} x^2\,dy\,dz + y^2\,dx\,dz + z^2\,dx\,dy$ normala $= -\vec{k}$!

normala zatvara pravi kut s osima x i y

$\Rightarrow \iint_{\Sigma_0} z^2\,dx\,dy$ jedino ostaje $\Rightarrow$ no z uvrstimo $\emptyset$ $\rightarrow$ sve je to $\emptyset$

$$I = \frac{a^4\pi}{2} - 0 = \frac{a^4\pi}{2}$$

iz $x^2+y^2+z^2=a^2$

$a = \frac{1}{3}$ $\rightarrow$ $\boxed{\frac{\pi}{162}}$

Zad. 104.) $\iint_{\Sigma} x^2\,dy\,dz + y^2\,dx\,dz + z^2\,dx\,dy$

$\Sigma \ldots\ x^2+y^2+z^2=\frac{9}{16}$ $\qquad z \geq 0 \nearrow$ $0 - \pi/2$ je ϑ

↳ nije zatvorena odozgo

($\vec{n} = -k$ za poslije)

$$\iint_{\Sigma} \vec{f}\cdot d\vec{s} + \iint_{\Sigma_0} \vec{f}\cdot d\vec{s} = \underbrace{\iint_{\Sigma\cup\Sigma_0} \vec{f}\cdot d\vec{s} = \iiint_V \operatorname{div}\vec{f}\,dx\,dy\,dz}_{\text{tek kada je zatvorena možemo primjeniti tm o divergenciji}}$$

$$\iint_{\Sigma} \vec{f}\cdot d\vec{s} = \iint_{\Sigma} x^2\,dy\,dz + y^2\,dx\,dz + z^2\,dx\,dy = \iiint \underbrace{\operatorname{div}\vec{f}}_{2x,\,2y,\,2z}\cdot dV$$

$x = r\cos\varphi\cdot\sin\vartheta$

$y = r\sin\varphi\cdot\sin\vartheta$

$z = r\cos\varphi$

$$2\cdot\int_0^{2\pi} d\varphi \int_0^{\frac{\pi}{2}} \sin\vartheta\, d\vartheta \int_0^{\frac{3}{4}} r\left(\cos\varphi\cdot\sin\vartheta + \sin\varphi\cdot\sin\vartheta + \cos\varphi\right) r^2\,dr$$

$$\cancel{2}\ \frac{1}{4}\left(\frac{3}{4}\right)^4\left(\underbrace{\int_0^{2\pi}(\cos\varphi + \sin\varphi)\int_0^{\frac{\pi}{2}}\sin^2\vartheta}_{0} + \int_0^{2\pi} d\varphi \int_0^{\frac{\pi}{2}} \cos\vartheta\cdot\sin\vartheta\, d\vartheta\right)$$

$$\frac{1}{2}\cdot\frac{3^4}{4^4}\left(\int_0^{2\pi} d\varphi \underbrace{\int_0^{\frac{\pi}{2}} \cos\vartheta\cdot\sin\vartheta\, d\vartheta}_{1/2}\right) = \frac{1}{4}\cdot\frac{81}{256}\int_0^{2\pi} d\varphi = \boxed{\frac{\pi}{2}\cdot\frac{81}{256}}$$

Zad. 105.) Izračunajte površinu onog dijela plohe $x^2+z^2=\frac{1}{2}z$ koji je $0 \le y \le z$.

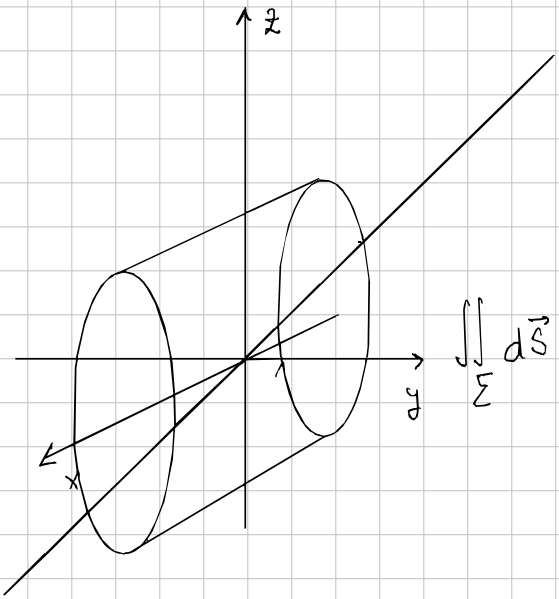
z
y
x

presječni valjak

ili $x = x(x,y)$

možemo $\rightarrow$ $z = z(x,y)$ ili

$$\iint_{\Sigma} d\vec{S}$$

$$dS = \sqrt{1+\frac{x^2}{1/2-x^2}+\emptyset}$$

$$z_x' = \frac{-x}{\sqrt{\frac{1}{2}-x^2}} \qquad z_y' = \emptyset$$

$$dS = \frac{\sqrt{\frac{1}{2}}}{\sqrt{\frac{1}{2}-x^2}}$$

Tražimo plohu $\rightarrow$ nemamo podintegralnu fju $\iint_{\Sigma} dS = \iint_{\Sigma} \frac{1}{\sqrt{2}} \frac{1}{\sqrt{\frac{1}{2}-x^2}}\,dx\,dy$

$$0 \le y \le \sqrt{\frac{1}{2}-x^2} \quad \Rightarrow \frac{1}{\sqrt{2}}\int_{-\frac{1}{\sqrt{2}}}^{\frac{1}{\sqrt{2}}} \frac{1}{\sqrt{\frac{1}{2}-x^2}}\,dx \int_0^{\sqrt{1/2-x^2}} dy$$

$$z = \sqrt{\frac{1}{2}-x^2}$$

$$z=0 \longrightarrow x = \frac{1}{\sqrt{2}} \text{ ili } \frac{-1}{\sqrt{2}}$$

$$\frac{1}{\sqrt{2}}\int_{-\frac{1}{\sqrt{2}}}^{\frac{1}{\sqrt{2}}} \frac{1}{\cancel{\sqrt{\frac{1}{2}-x^2}}} \cdot \cancel{\sqrt{\frac{1}{2}-x^2}} = \frac{1}{\sqrt{2}} \cdot \frac{2}{\sqrt{2}} = \boxed{1}$$

Zad. 6.) $x^2+z^2=\frac{4}{9}$ $\quad 0\le y\le z$

$x(z,y)$ ili $\underline{z(x,y)}$ lakše

$$z=\sqrt{\frac{4}{9}-x^2} \qquad z_x'=\frac{-x}{\sqrt{\frac{4}{9}-x^2}} \qquad z_y'=0 \longrightarrow dS=\sqrt{\frac{\frac{4}{9}-\cancel{x^2}+\cancel{x^2}}{\frac{4}{9}-x^2}}=\frac{\frac{2}{3}\,dx\,dy}{\sqrt{\frac{4}{9}-x^2}}$$

$$\iint dS=\iint\frac{\frac{2}{3}\,dx\,dy}{\sqrt{\frac{4}{9}-x^2}}=\frac{2}{3}\int_{-\frac{2}{3}}^{\frac{2}{3}}\frac{1}{\sqrt{\frac{4}{9}-x^2}}\,dx\int_0^{\sqrt{\frac{4}{9}-x^2}}dy$$

$$y=z=\sqrt{\frac{4}{9}-x^2} \qquad =\frac{2}{3}\cdot\frac{4}{3}=\boxed{\frac{8}{9}}$$

Zad. 7.) $x^2+z^2=\frac{1}{3}$ $\quad 0\le y\le z$

$$z=\sqrt{\frac{1}{3}-x^2} \longrightarrow z_x'=\frac{-x}{\sqrt{\frac{1}{3}-x^2}} \qquad z_y'=\emptyset \Rightarrow dS=\frac{1}{\sqrt{3}}\cdot\frac{dx\,dy}{\sqrt{\frac{1}{3}-x^2}}$$

$$\iint dS=\frac{1}{\sqrt{3}}\iint\frac{dx\,dy}{\sqrt{\frac{1}{3}-x^2}}=\frac{1}{\sqrt{3}}\int_{-\frac{1}{\sqrt{3}}}^{\frac{1}{\sqrt{3}}}\frac{1}{\sqrt{\frac{1}{3}-x^2}}\cdot\int_0^{\sqrt{\frac{1}{3}-x^2}}dy=\frac{1}{\sqrt{3}}\cdot\frac{2}{\sqrt{3}}=\boxed{\frac{2}{3}}$$

Zad 8.) Napamet već

Zad 9.) Izračunajte primjenom TM o divergenciji

$\iint_{S^+} x\,dy\,dz+2y\,dx\,dz+3z\,dx\,dy$, S je vanjski dio plašta valjka $x^2+y^2=1$ → nije zatvorena ploha

$z=1,\quad z=2$

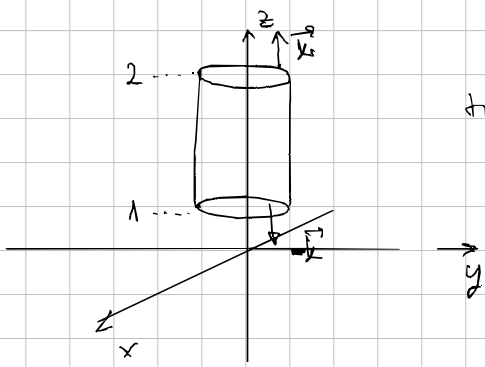

treba zatvoriti plohu

$$\iint_\Sigma\vec{f}\cdot d\vec{S}+\iint_{\Sigma_0}\vec{f}\cdot d\vec{S}=\iint_{\Sigma+\Sigma_0}\vec{f}\cdot d\vec{S}$$

$$\Rightarrow \iiint_V \operatorname{div}\vec{f}\,dV$$

$$\iint_\Sigma\vec{f}\cdot d\vec{S}=\underbrace{\iiint_V \operatorname{div}\vec{f}\,dV}-\iint_{\Sigma_0}\vec{f}\cdot d\vec{S}$$

$$\operatorname{div}\vec{f}=1+2+3=\underline{6}\longrightarrow 6\iiint dx\,dy\,dz=\boxed{6\pi}$$

$\iint_{\Sigma_0}\vec{f}\,d\vec{S}$ = z je konstanta → $dz=\emptyset \Rightarrow \iint 3\cdot 2\cdot dx\,dy=6\pi$ gornji

$-\iint 3\cdot 1\,dx\,dy=-3\pi$

$-k$ jer normala gleda dolje

$$I=6\pi-6\pi+3\pi \Rightarrow \boxed{I=3\pi}$$

Zad. 110.) $\iint_S -4x\,dy\,dz + 5y\,dx\,dz - 5z\,dx\,dy$

S je vanjski dio plašta plohe $4x^2 + y^2 = 4$ (nije zatvorena)
i između $z=-4$ i $z=0$ se nalazi.

... bla bla ugl $\Rightarrow \iiint_V \operatorname{div}\vec{f}\,dV - \underbrace{\iint_{\Sigma_0} \vec{f}\cdot d\vec{S}}_{\text{pomoćne plohe}}$

$\operatorname{div}\vec{f} = -4 + \cancel{5} - \cancel{5} = -4$

$\cancel{\Rightarrow \iiint_V \operatorname{div}\vec{f}\,dx\,dy\,dz = \boxed{-4\pi}}$

$x^2 + \frac{y^2}{4}$

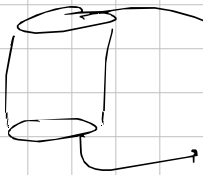

$\rightarrow -\iint (-5)\cdot 4\,dx\,dy = \boxed{20\pi}$

$\rightarrow \cancel{-\iint -5\cdot 0\,dx\,dy}$

$$-4\int_0^{2\pi} d\varphi \int_0^1 r^2 \int_{-4}^{0} z\cdot 2\,dr = -4\cdot 2\pi\cdot\frac{1}{3}\cdot 4 = \frac{-32}{3}\pi$$

Zadatak 112) Stokesov TM

Krivuljne integrale po ZATVORENIM krivuljama možemo računati kao PLOŠNE integrale plohe koju ta krivulja zatvara

* FIZ: $\oint_C \vec{E}\cdot d\vec{r} = \frac{-\partial}{\partial t}\int_S \vec{B}\cdot d\vec{S} = \int_S \vec{\nabla}\times\vec{E}\, d\vec{S} = \underline{\underline{\int_S \mathrm{rot}\,\vec{E}\, d\vec{S}}}$!

$\oint_C z\,dx + 3dy - 2x\,dz$ duž presječnice C plohe $x^2+y^2=9$, $\underline{y+z=5}$

C orijentirana tako da je njena ortogonalna proj. u (x,y) ravnini poz orijentirana

$f = z\vec{i} + 3\vec{j} - 2x\vec{k}$ radimo po plohi $\underline{\underline{y+z=5}}$!

$$\mathrm{rot}\,f = \begin{vmatrix} i & j & k \\ \frac{\partial f}{\partial x} & \frac{\partial f}{\partial y} & \frac{\partial f}{\partial z} \\ z & 3 & -2x \end{vmatrix} = i\,0 - j\,(-2-1) \cancel{+k\cdot 0} \rightarrow \boxed{+3j}$$

$\frac{\nabla}{\|\nabla\|}$ *(želimo ∇ od plohe) $\Rightarrow \boxed{\frac{\nabla}{\|\nabla\|} = \frac{j+k}{\sqrt{2}}} = \vec{n}$

$dS = ?$ $\quad z = 5-y \rightarrow z_x' = 0 \quad z_y' = -1 \quad z_z' = 1 \Rightarrow \underline{\underline{dS = \sqrt{2}\,dx\,dy}}$

Stokes u plohama: $\oint_{S=\partial V} \vec{E}\cdot d\vec{s} = \int_V \vec{\nabla}\vec{E}\, d\vec{S}$

$$\Rightarrow \boxed{\iint_\Sigma \mathrm{rot}\,\vec{f}\cdot\vec{n}\cdot d\vec{S}} \Rightarrow \iint (+3j)\cdot\frac{(j+k)}{\cancel{\sqrt{2}}}\cdot\cancel{\sqrt{2}}\,dx\,dy$$

$$= +3\underbrace{\iint dx\,dy}_{\text{površina plohe}}$$

2. plohe je $x^2+y^2=\overset{r^2}{9}$, $P = 9\pi$

$$\Rightarrow \boxed{3\cdot 9\pi = \boxed{27\pi}}$$ A

Zadatak 113.) $\oint_C 3z\,dx - y\,dy + 5x\,dz$ $\qquad x^2+y^2=3$

$3y+4z=-6$

poz. orijentirana

$$f = 3z\vec{i} - y\vec{j} + 5x\vec{k}$$

$$\text{rot}\,\vec{f} = \begin{vmatrix} i & j & k \\ \partial x & \partial y & \partial z \\ 3z & -y & +5x \end{vmatrix} = 0 - j\,(5-3) = -2\vec{j}$$

$$\frac{\nabla}{\|\nabla\|} = \frac{(3,-1,5)}{\sqrt{9+1+25}} = \frac{(3,-1,5)}{\sqrt{35}} = \vec{n}$$

$$z = \frac{1}{4}(-6-3y) = \frac{-3}{4}(2+y) \rightarrow z_x' = 0 \quad , z_y' = \frac{-3}{4}$$

$$dS = \sqrt{1+\frac{9}{16}} = \frac{5}{4}\,dx\,dy$$

$$\iint_\Sigma (-2j)\,\frac{(3\vec{i}-\vec{j}+5\vec{k})}{\sqrt{35}} \cdot \frac{5}{4}\,dx\,dy = \iint 2 \cdot \frac{5}{4\sqrt{35}}\,dx\,dy = \frac{5}{2\sqrt{35}} \cdot 3\pi$$